Catalog Id		Dimensions			Mounting Number of Point
Bus Bar Assembly Natural	Bus Bar Assembly Tin-Plating	L	W	T	
OEC-CBB-M-0240314-U	OEC-CBB-M-0240314-T	24.00 [609.60]	3.00 [76.20]	1/4 [203.20]	63
OEC-CBB-M-0080314-U	OEC-CBB-M-0080314-T	8.00 [203.20]			15
OEC-CBB-M-0120314-U	OEC-CBB-M-0120314-T	12.00 [304.80]			27
OEC-CBB-M-0080414-U	OEC-CBB-M-0080414-T	8.00 [203.20]	4.00 [101.60]		15
OEC-CBB-M-0120414-U	OEC-CBB-M-0120414-T	12.00 [304.80]			27
OEC-CBB-M-0160414-U	OEC-CBB-M-0160414-T	16.00 [406.40]			39
OEC-CBB-M-0180414-U	OEC-CBB-M-0180414-T	18.00 [457.20]			45
OEC-CBB-M-0200414-U	OEC-CBB-M-0200414-T	20.00 [508.00]			51
OEC-CBB-M-0240414-U	OEC-CBB-M-0240414-T	24.00 [609.60]			63
OEC-CBB-M-0360412-U	OEC-CBB-M-0360412-T	36.00 [914.40]		1/2 [12.70]	99
OEC-CBB-M-0480414-U	OEC-CBB-M-0480414-T	48.00 [1219.20]		1/4 [203.20]	135
OEC-CBB-M-0180412-U	OEC-CBB-M-0180412-T	18.00 [457.20]		1/2 [12.70]	45
OEC-CBB-M-0180614-U	OEC-CBB-M-0180614-T	18.00 [457.20]	6.00 [152.40]	1/4 [203.20]	45
OEC-CBB-M-0480612-U	OEC-CBB-M-0480612-T	48.00 [1219.20]		1/2 [12.70]	135
OEC-CBB-M-0240814-U	OEC-CBB-M-0240814-T	24.00 [609.60]	8.00 [203.20]	1/4 [203.20]	63

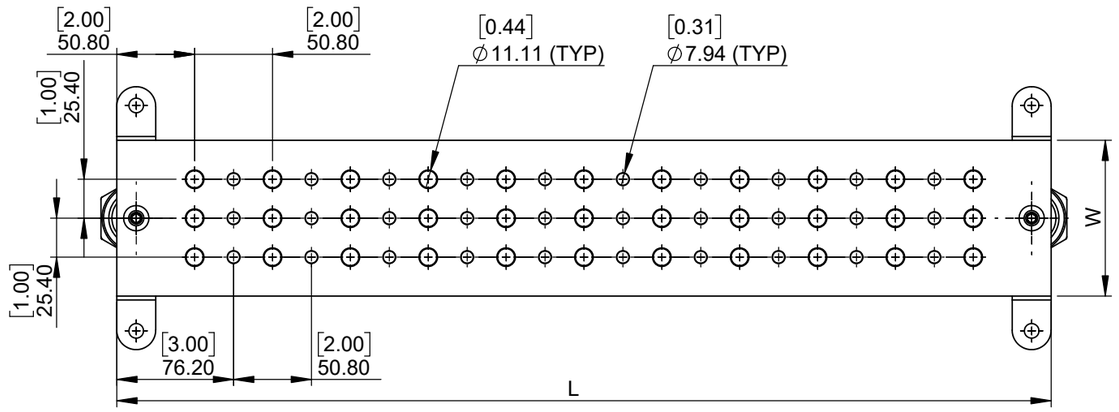

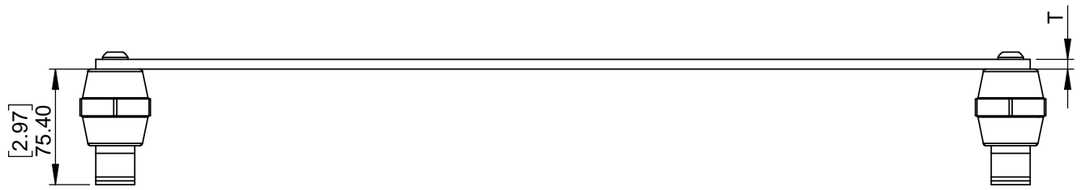

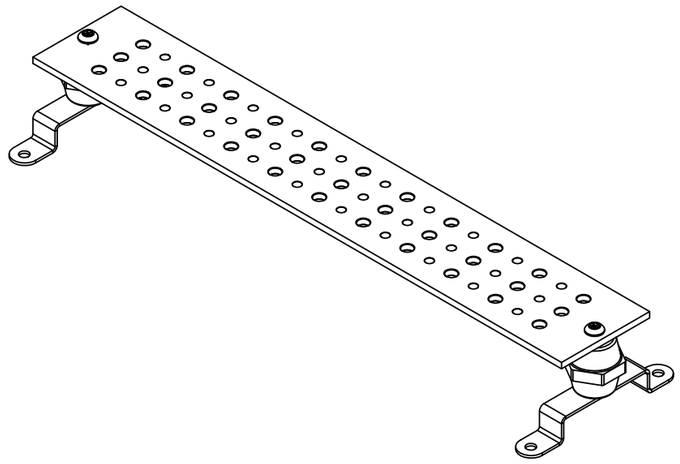

Note:

- Manufactured from Standard Material Copper
- Assembled With Tamper Proof Bolts And Insulators
- UL Listed
- All Bars Available With Electro Tin Plating / Natural
- All Holes Are 7/16" Unless Otherwise Specified

TOLERANCE		
L	W	T
±1.00	±1.00	±0.20

TOLERANCES-UNLESS OTHERWISE SPECIFIED
2 PL. DEC. ±.015 TRUE C.L. ±.015
3 PL. DEC. ±.015 ANGLES ±.015

	NAME	DATE
DRAWN	R.P	06.03.25
CHECK	S.P.	06.03.25
APPROVED	M.K.	06.03.25

OEC Usa Inc.
106 Northfield Avenue, Edison, NJ 08837,
Phone: +1 732-479-0469 www.oec-americas.com

DWG. NO. OB-0012
PROJECTION: FIRST ANGLE
SIZE A3
TITLE: Bus Bar Assembly Pattern "MM"
MATERIAL Refer Note
FINISH Refer Note
Cat Id. OEC-CBBMM-0240314 OEC-CBBMM-0240814 -
REV
DO NOT SCALE DRAWING
SHEET 1 OF 1

THE INFORMATION CONTAINED WITHIN THIS DOCUMENT IS PROPRIETARY TO OEC AND MAY NOT BE DISCLOSED WITHOUT PRIOR WRITTEN CONSENT