Catalog Id		Dimensions			Mounting Number of Point
Bus Bar Assembly Natural	Bus Bar Assembly Tin-Plating	L	W	T	
OEC-CBB-B-0060214-U	OEC-CBB-B-0060214-T	6.00 [152.40]	2.00 [50.80]	1/4 [6.35]	4
OEC-CBB-B-0080214-U	OEC-CBB-B-0080214-T	8.00 [203.20]			6
OEC-CBB-B-0100214-U	OEC-CBB-B-0100214-T	10.00 [254.00]		3/8 [9.52]	8
OEC-CBB-B-0120214-U	OEC-CBB-B-0120214-T	12.00 [304.80]		1/4 [6.35]	10
OEC-CBB-B-0140214-U	OEC-CBB-B-0140214-T	14.00 [355.60]			12
OEC-CBB-B-0160214-U	OEC-CBB-B-0160214-T	16.00 [406.40]			14
OEC-CBB-B-0180214-U	OEC-CBB-B-0180214-T	18.00 [457.20]			16
OEC-CBB-B-0200214-U	OEC-CBB-B-0200214-T	20.00 [508.00]			18
OEC-CBB-B-0240214-U	OEC-CBB-B-0240214-T	24.00 [609.60]			22
OEC-CBB-B-0360214-U	OEC-CBB-B-0360214-T	36.00 [914.40]			34
OEC-CBB-B-0480214-U	OEC-CBB-B-0480214-T	48.00 [1219.20]			46
OEC-CBB-B-0960214-U	OEC-CBB-B-0960214-T	96.00 [2438.40]			94
OEC-CBB-B-0240212-U	OEC-CBB-B-0240212-T	24.00 [609.60]		1/2 [12.70]	22
OEC-CBB-B-0120314-U	OEC-CBB-B-0120314-T	12.00 [304.80]	3.00 [76.20]	1/4 [6.35]	10
OEC-CBB-B-0200314-U	OEC-CBB-B-0200314-T	20.00 [508.00]			18
OEC-CBB-B-0240314-U	OEC-CBB-B-0240314-T	24.00 [609.60]			22
OEC-CBB-B-0360314-U	OEC-CBB-B-0360314-T	36.00 [914.40]			34
OEC-CBB-B-0200338-U	OEC-CBB-B-0200338-T	20.00 [508.00]		3/8 [9.52]	18
OEC-CBB-B-0080414-U	OEC-CBB-B-0080414-T	8.00 [203.20]	4.00 [101.60]	1/4 [6.35]	6
OEC-CBB-B-0100414-U	OEC-CBB-B-0100414-T	10.00 [254.00]			8
OEC-CBB-B-0120414-U	OEC-CBB-B-0120414-T	12.00 [304.80]			10
OEC-CBB-B-0140414-U	OEC-CBB-B-0140414-T	14.00 [355.60]			12
OEC-CBB-B-0160414-U	OEC-CBB-B-0160414-T	16.00 [406.40]			14
OEC-CBB-B-0180414-U	OEC-CBB-B-0180414-T	18.00 [457.20]			16
OEC-CBB-B-0200414-U	OEC-CBB-B-0200414-T	20.00 [508.00]			18
OEC-CBB-B-0240414-U	OEC-CBB-B-0240414-T	24.00 [609.60]			22
OEC-CBB-B-0300414-U	OEC-CBB-B-0300414-T	30.00 [762.00]			28
OEC-CBB-B-0320414-U	OEC-CBB-B-0320414-T	32.00 [812.8]			30
OEC-CBB-B-0360414-U	OEC-CBB-B-0360414-T	36.00 [914.40]			34
OEC-CBB-B-0480414-U	OEC-CBB-B-0480414-T	48.00 [1219.20]			46
OEC-CBB-B-0600414-U	OEC-CBB-B-0600414-T	60.00 [1524.00]			58
OEC-CBB-B-0720414-U	OEC-CBB-B-0720414-T	72.00 [1828.80]			70
OEC-CBB-B-1200414-U	OEC-CBB-B-1200414-T	120.00 [3048.00]			118
OEC-CBB-B-1200438-U	OEC-CBB-B-1200438-T	120.00 [3048.00]		3/8 [9.52]	118
OEC-CBB-B-0180438-U	OEC-CBB-B-0180438-T	18.00 [457.20]			16
OEC-CBB-B-0200438-U	OEC-CBB-B-0200438-T	20.00 [508.00]			18
OEC-CBB-B-0240438-U	OEC-CBB-B-0240438-T	24.00 [609.60]			22
OEC-CBB-B-0480438-U	OEC-CBB-B-0480438-T	48.00 [1219.20]			46

Catalog Id		Dimensions			Mounting Number of Point
Natural	Tin-Plating	L	W	T	
OEC-CBB-B-0180614-U	OEC-CBB-B-0180614-T	18.00 [457.20]	6.00 [152.40]	1/4 [6.35]	16
OEC-CBB-B-0240614-U	OEC-CBB-B-0240614-T	24.00 [609.60]			22
OEC-CBB-B-0360614-U	OEC-CBB-B-0360614-T	36.00 [914.40]			34
OEC-CBB-B-0120814-U	OEC-CBB-B-0120814-T	12.00 [304.80]			10

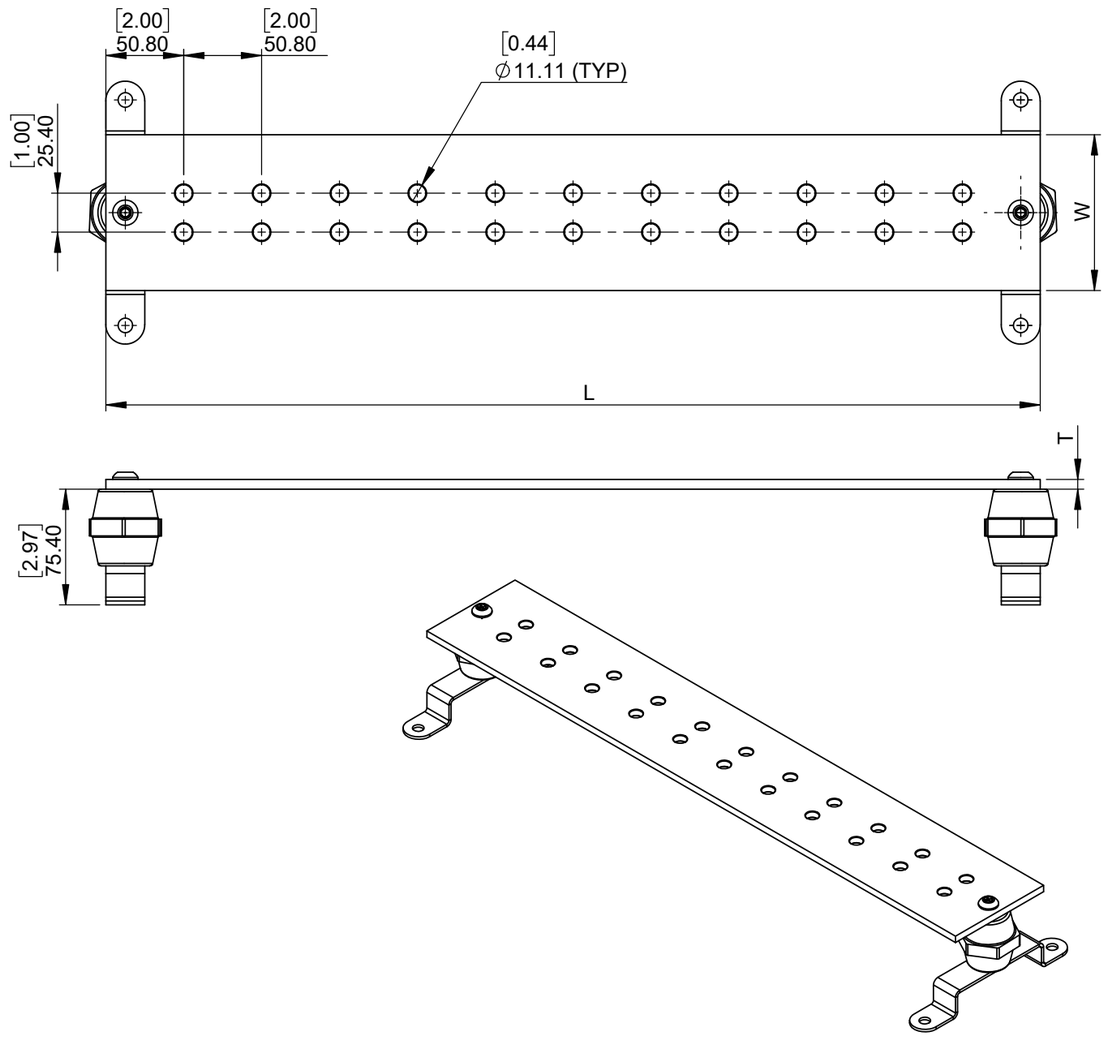

Note:

- Manufactured from Standard Material Copper
- Assembled With Tamper Proof Bolts And Insulators
- UL Listed
- All Bars Available With Electro Tin Plating / Natural
- All Holes Are 7/16" Unless Otherwise Specified

TOLERANCE		
L	W	T
±1.00	±1.00	±0.20

TOLERANCES-UNLESS OTHERWISE SPECIFIED
2 PL. DEC. ±.015 TRUE C.L. ±.015
3 PL. DEC. ±.015 ANGLES ±.015

	NAME	DATE
DRAWN	R.P	04.03.25
CHECK	S.P.	04.03.25
APPROVED	M.K.	04.03.25

OEC Usa Inc.
106 Northfield Avenue, Edison, NJ 08837,
Phone: +1 732-479-0469 www.oec-americas.com

DWG. NO. OB-0002

PROJECTION: FIRST ANGLE

SIZE A3

TITLE: Bus Bar Assembly Pattern "BB"

MATERIAL Refer Note

FINISH Refer Note

Cat Id. OEC-CBBBB-0060214 - OEC-CBBBB-0120814

REV

DO NOT SCALE DRAWING

SHEET 1 OF 1

THE INFORMATION CONTAINED WITHIN THIS DOCUMENT IS PROPRIETARY TO OEC AND MAY NOT BE DISCLOSED WITHOUT PRIOR WRITTEN CONSENT