Catalog Id		Conductor			Stud Size	Dimensions									Color Code	Installation Tooling					Dieless
Without Flared Barrel (Fig-1)	With Flared Barrel (Fig-2)	AWG	Flex Conductor G,H,I,K,M & DLO	Expanded Cod. Range		OD	L	B	A	W	T	∅F	E	C		Burndy Model - Y35, Y39, Y750, PAT750, PAT750LI	Ilsco ILC-12-N, ILC-12-H-N, ILCB-12		Huskie Model - EP-510C Die Index	Greeniee HK1240	
BA98058	FBA98058	350	250 (G,H,I,K,M) 262.6(DLO)	350 - #3/0	1/2	0.87 [22.20]	4.53 [115.00]	1.10 [28.00]	2.99 [76.00]	1.27 [32.40]	0.16 [4.20]	0.51 [13.00]	0.62 [15.70]	1.75 [44.50]	Red	-	ILD-14	ILD - 71	HT41BJ	KC12-350	Burndy Dieless - PAT444S & PAT4PC834LI. Ilsco Dieless -IDT-6, IDT-6H, IDTB-6, IDTB-6-LIO, TB-6DF1000-P,IDT-12-N, IVTB-6. Greenlee & NSI Dieless - HK12ID, EK12IDL, N12ID.
BA98058A	FBA98058A				3/8	0.87 [22.20]	3.35 [85.00]	1.10 [28.00]	1.81 [46.00]	1.27 [32.40]	0.16 [4.20]	0.41 [10.50]	0.38 [9.70]	1.00 [25.40]							

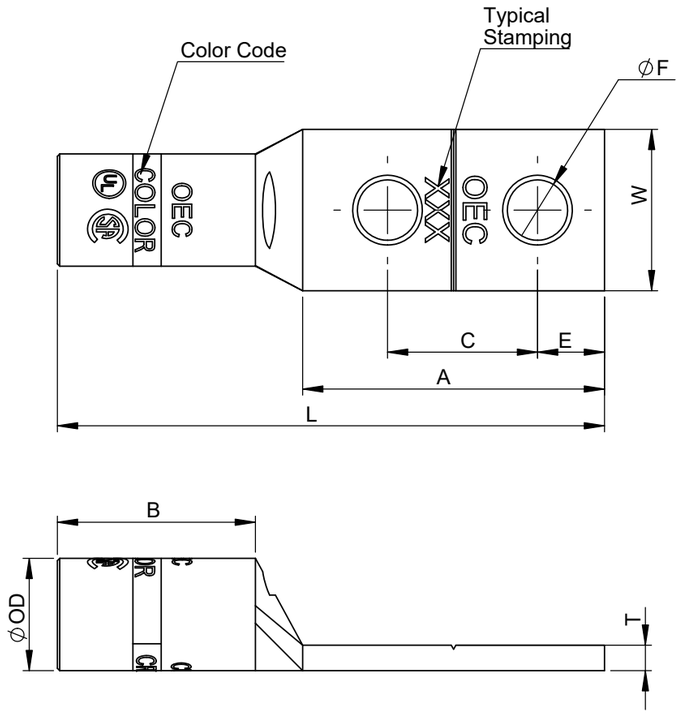

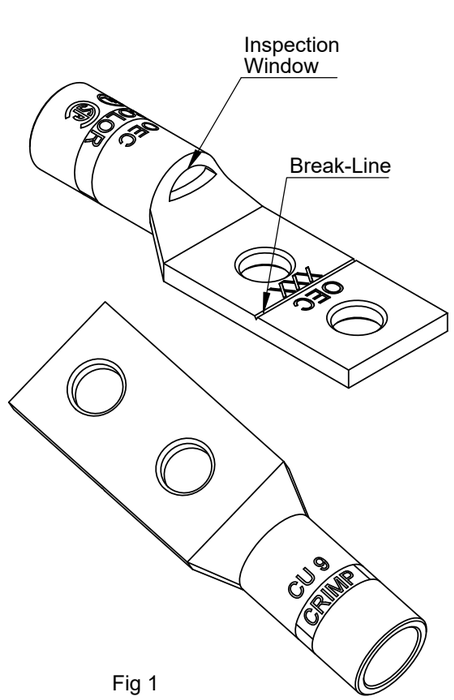

Fig 1

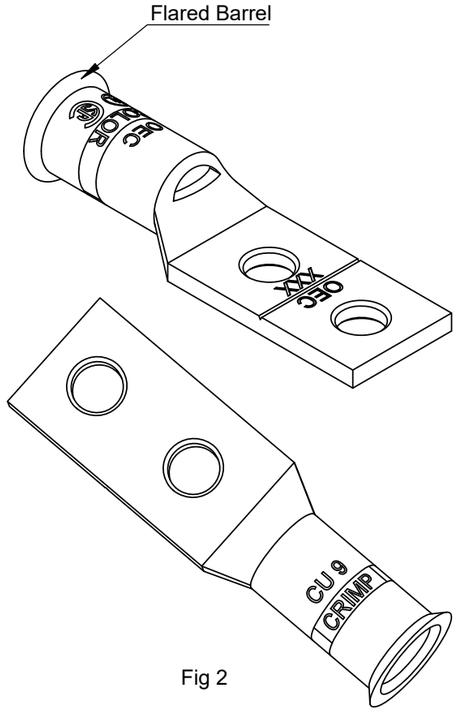

Fig 2

Note:
- Manufactured from high strength seamless Copper tubing
- Color coded die index and crimp marks
- Electro-Tin plated for corrosion resistance
- Pre-filled with oxide inhibitor and capped with color coded cap.
- UL486A/B Listed for Wire Connectors
- UL Listed and CSA Certified with competitor's compression tools
- Listed for use with class B & C, flex class G, H, I, K, M & DLO cable

Crimping Instructions

- Select the proper lug or splice connector for the size of cable being installed, ensuring that the size matches the description in the table.
- Strip the insulation from the cable to a length so that the stripped area of the cable can be completely inserted into and fill the barrel of the lug or splice. Carefully strip the insulation from the cable without nicking the strands.
- Clean the stripped portion of the cable to remove oxide films.
- The stripped portion of the cable must be clean and inserted completely into the connector barrel.
- Using the tool and die combination specified for that connector in the table above, install crimps, leaving a space of 1/8 inch minimum between successive crimps.
  For Short Barrel Connectors, apply 1 crimp,
  For Long Barrel Connectors, apply 2 crimps on the color coded bands

TOLERANCE					
OD	L	B	A	W	∅F
±0.20	±1.0	±0.50	±0.50	±1.0	±0.20

TOLERANCES-UNLESS OTHERWISE SPECIFIED
2 PL. DEC. ±.015 TRUE C.L. ±.015
3 PL. DEC. ±.015 ANGLES ±.015

	NAME	DATE
DRAWN	R.P	01.03.25
CHECK	S.P.	01.03.25
APPROVED	M.K.	01.03.25

OEC Usa Inc.
106 Northfield Avenue, Edison, NJ 08837,
Phone: +1 732-479-0469 www.oec-americas.com

DWG. NO. OC-0007
PROJECTION: FIRST ANGLE
SIZE A3
TITLE: Copper Two Hole Standard Barrel Compression Lug Break-Away
MATERIAL Refer Note
FINISH Refer Note
Cat Id. BA98058 - BA98058A
REV
DO NOT SCALE DRAWING
SHEET 13 OF 19

THE INFORMATION CONTAINED WITHIN THIS DOCUMENT IS PROPRIETARY TO OEC AND MAY NOT BE DISCLOSED WITHOUT PRIOR WRITTEN CONSENT