Catalog Id		Conductor			Stud Size	Dimensions								Color Code	Installation Tooling					Dieless
Without Flared Barrel (Fig-1)	With Flared Barrel (Fig-2)	AWG	Flex Conductor G,H,I,K,M & DLO	Expanded Cod. Range		OD	L	B	A	W	T	∅F	E		Burndy Model - Y35, Y39, Y750, PAT750, PAT750LI	Ilsco ILC-12-N, ILC-12-H-N, ILCB-12		Huskie Model - EP-510C Die Index	Greeniee HK1240	
98024	F98024	#3/0	#2/0	#3/0 - #2	1/4	0.62 [15.80]	2.36 [60.00]	0.98 [25.00]	1.06 [27.00]	0.90 [22.90]	0.12 [3.20]	0.25 [6.40]	0.47 [12.00]	Orange	U27RT	ILD-10	ILD - 50	HT41BA	KC12-3/0	Burndy Dieless - PAT444S & PAT4PC834LI. Ilsco Dieless -IDT-6, IDT-6H, IDTB-6, IDTB-6-LIO, TB-6DF1000-P,IDT-12-N, IVTB-6. Greenlee & NSI Dieless - HK12ID, EK12IDL, N12ID.
98025	F98025				5/16	0.62 [15.80]	2.36 [60.00]	0.98 [25.00]	1.06 [27.00]	0.90 [22.90]	0.12 [3.20]	0.33 [8.40]	0.47 [12.00]							
98026	F98026				3/8	0.62 [15.80]	2.36 [60.00]	0.98 [25.00]	1.06 [27.00]	0.90 [22.90]	0.12 [3.20]	0.41 [10.50]	0.47 [12.00]							
98027	F98027				1/2	0.62 [15.80]	2.36 [60.00]	0.98 [25.00]	1.06 [27.00]	0.90 [22.90]	0.12 [3.20]	0.51 [13.00]	0.47 [12.00]							

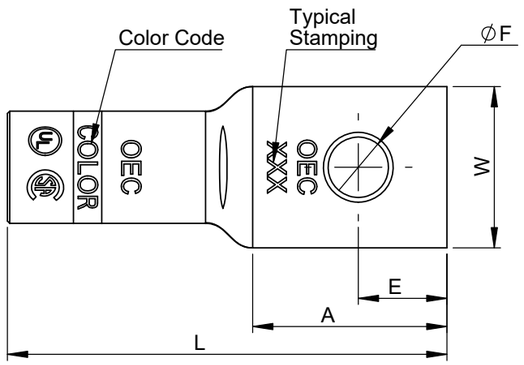

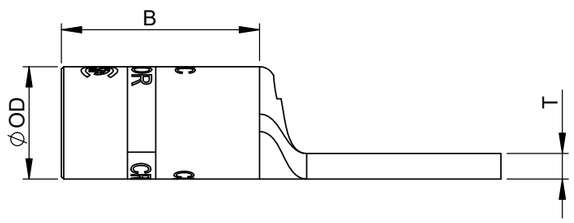

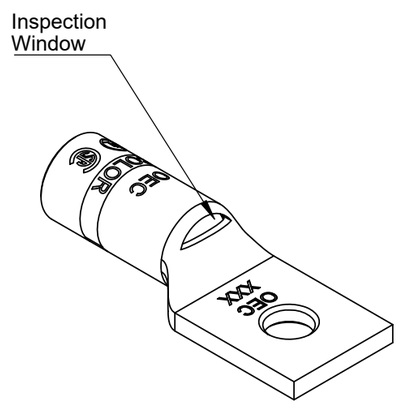

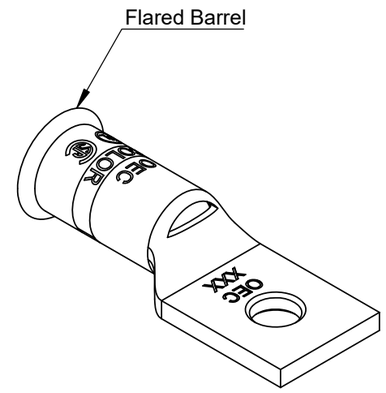

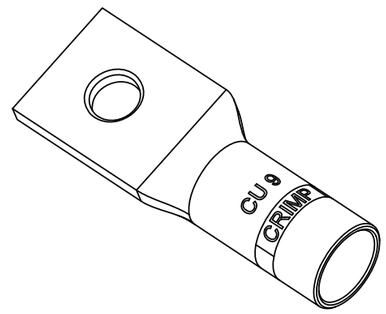

Fig-1

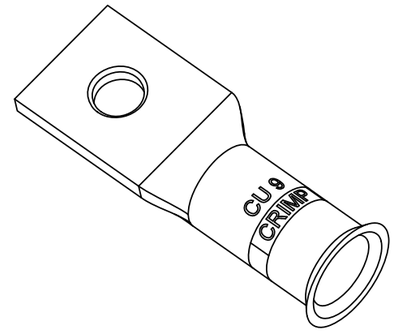

Fig-2

Note:
- Manufactured from high strength seamless Copper tubing
- Color coded die index and crimp marks
- Electro-Tin plated for corrosion resistance
- Pre-filled with oxide inhibitor and capped with color coded cap.
- UL486A/B Listed for Wire Connectors
- UL Listed and CSA Certified with competitor's compression tools
- Listed for use with class B & C, flex class G, H, I, K, M & DLO cable

Crimping Instructions

- Select the proper lug or splice connector for the size of cable being installed, ensuring that the size matches the description in the table.
- Strip the insulation from the cable to a length so that the stripped area of the cable can be completely inserted into and fill the barrel of the lug or splice. Carefully strip the insulation from the cable without nicking the strands.
- Clean the stripped portion of the cable to remove oxide films.
- The stripped portion of the cable must be clean and inserted completely into the connector barrel.
- Using the tool and die combination specified for that connector in the table above, install crimps, leaving a space of 1/8 inch minimum between successive crimps.
  For Short Barrel Connectors, apply 1 crimp,
  For Long Barrel Connectors, apply 2 crimps on the color coded bands

TOLERANCE					
OD	L	B	A	W	∅F
±0.20	±1.0	±0.50	±0.50	±1.0	±0.20

TOLERANCES-UNLESS OTHERWISE SPECIFIED
2 PL. DEC. ±.015 TRUE C.L. ±.015
3 PL. DEC. ±.015 ANGLES ±.015

	NAME	DATE
DRAWN	R.P	14.02.25
CHECK	S.P.	14.02.25
APPROVED	M.K.	14.02.25

PROJECTION: FIRST ANGLE

DWG. NO. OC-0001

SIZE A3

MATERIAL Refer Note

FINISH Refer Note

OEC Usa Inc.
106 Northfield Avenue, Edison, NJ 08837,
Phone: +1 732-479-0469 www.oec-americas.com

TITLE: Copper One Hole Standard Barrel Compression Lug

Cat Id. 98024-98027 REV

DO NOT SCALE DRAWING SHEET 9 OF 19

THE INFORMATION CONTAINED WITHIN THIS DOCUMENT IS PROPRIETARY TO OEC AND MAY NOT BE DISCLOSED WITHOUT PRIOR WRITTEN CONSENT