Catalog Id				Wire Range	No. of Port	Dimensions			Hex Size	Torque (In-lbs)
Part No.	Part No.(Clear)	Part No.(Blue)	Part No.(Gray)			L	W	H		
60003B	60003BC	60003B-BL	60003B-GR	2-14 Sol/Str	02	1.25 [31.75]	1.41 [35.81]	1.38 [35.05]	Slot Head	50
63013B	63013BC	63013B-BL	63013B-GR	2-14 Sol/Str	03	1.88 [47.75]				
63014B	63014BC	63014B-BL	63014B-GR	2-14 Sol/Str	04	2.51 [63.75]				
63015B	63015BC	63015B-BL	63015B-GR	2-14 Sol/Str	05	3.14 [79.75]				
63016	63016C	63016-BL	63016-GR	2-14 Sol/Str	06	3.77 [95.75]				
63017B	63017BC	63017B-BL	63017B-GR	2-14 Sol/Str	07	4.40 [111.76]				
63018B	63018BC	63018B-BL	63018B-GR	2-14 Sol/Str	08	5.03 [127.76]				
63019B	63019BC	63019B-BL	63019B-GR	2-14 Sol/Str	09	5.66 [143.76]				
63020B	63020BC	63020B-BL	63020B-GR	2-14 Sol/Str	10	6.29 [159.76]				
63021B	63021BC	63021B-BL	63021B-GR	2-14 Sol/Str	11	6.92 [175.76]				
63022B	63022BC	63022B-BL	63022B-GR	2-14 Sol/Str	12	7.55 [191.77]				
63022B-13	63022BC-13	63022B-BL-13	63022B-GR-13	2-14 Sol/Str	13	8.18 [207.77]				
63022B-14	63022BC-14	63022B-BL-14	63022B-GR-14	2-14 Sol/Str	14	8.81 [223.77]				

Note:

- Insulated With High Dieelectric Access Plastisol
- Dual Rated For Copper And Aluminum Conductors
- Wire Range: 750Kcmil-14
- UL486 A/B Listed For Wire Connectors
- Cold Temperature Rated Up To -45°C
- Pre-Filled With Oxide Inhibitor Prevents Oxidation Moisture And Contaminats From Entering Area
- Supplies With Removable Access Plugs
- Black Insulation Is UV Resistant
- Insulation UV Stablized & Listed To UL94 With V0 Flammability
- Suitable For Use In Panel Boards, Cable Entry, Duct And Troughs
- Standard Finish Black/Clear
- Available In Colors : Black, Clear, Blue, Gray

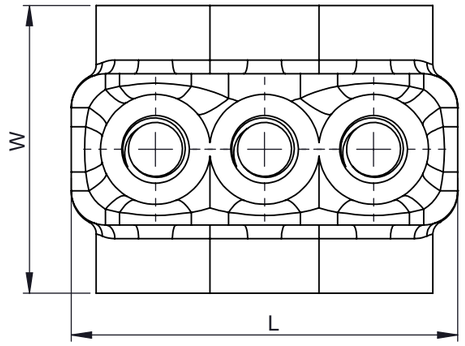

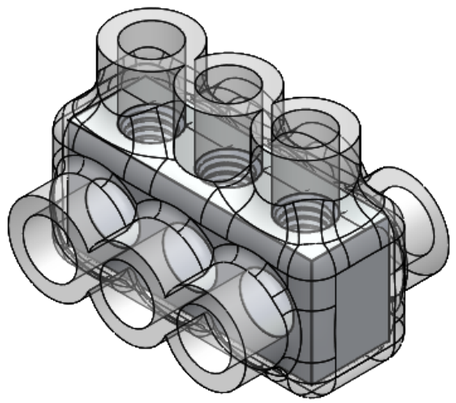

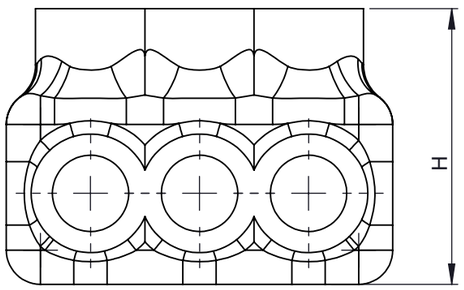

Tolerance		
L	W	H
±0.50	±0.50	±1.0

TOLERANCES-UNLESS OTHERWISE SPECIFIED
2 PL. DEC. ±.015 TRUE C.L. ±.015
3 PL. DEC. ±.015 ANGLES ±.015

	NAME	DATE
DRAWN	R.P	15.03.25
CHECK	S.P.	15.03.25
APPROVED	M.K.	15.03.25

OEC Usa Inc.
106 Northfield Avenue, Edison, NJ 08837,
Phone: +1 732-479-0469 www.oec-americas.com

DWG. NO. OIM-0002

PROJECTION: FIRST ANGLE

SIZE A3

TITLE: Insulated Multi-Tap Connectors Dual Sided Entry

MATERIAL Refer Note

FINISH Refer Note

Cat Id. 60003B - 63022B-14 REV

DO NOT SCALE DRAWING SHEET 2 OF 10

THE INFORMATION CONTAINED WITHIN THIS DOCUMENT IS PROPRIETARY TO OEC AND MAY NOT BE DISCLOSED WITHOUT PRIOR WRITTEN CONSENT