Catalog Id				Wire Range	No. of Port	Dimensions			Hex Size	Torque (In-lbs)
Part No.	Part No.(Clear)	Part No.(Blue)	Part No.(Gray)			L	W	H		
60003AM	60003AMC	60003AM-BL	60003AM-GR	2-14 Sol/Str	02	2.50 [63.50]	1.20 [30.48]	1.38 [35.05]	Slot Head	50
64013A	64013AC	64013A-BL	64013A-GR	2-14 Sol/Str	03	3.14 [79.75]				
64014A	64014AC	64014A-BL	64014A-GR	2-14 Sol/Str	04	3.77 [95.75]				
64015A	64015AC	64015A-BL	64015A-GR	2-14 Sol/Str	05	4.40 [111.76]				
64016A	64016AC	64016A-BL	64016A-GR	2-14 Sol/Str	06	5.03 [127.76]				
64017A	64017AC	64017A-BL	64017A-GR	2-14 Sol/Str	07	5.66 [143.76]				
64018A	64018AC	64018A-BL	64018A-GR	2-14 Sol/Str	08	6.29 [159.76]				
64019A	64019AC	64019A-BL	64019A-GR	2-14 Sol/Str	09	6.92 [175.76]				
64020A	64020AC	64020A-BL	64020A-GR	2-14 Sol/Str	10	7.55 [191.77]				
64021A	64021AC	64021A-BL	64021A-GR	2-14 Sol/Str	11	8.18 [207.77]				
64022A	64022AC	64022A-BL	64022A-GR	2-14 Sol/Str	12	8.81 [233.77]				
62023A	62023AC	62023A-BL	62023A-GR	2-14 Sol/Str	13	9.44 [239.77]				
62024A	62024AC	62024A-BL	62024A-GR	2-14 Sol/Str	14	10.00 [254.00]				

Note:

- Insulated With High Dieelectric Access Plastisol
- Dual Rated For Copper And Aluminum Conductors
- Wire Range: 750Kcmil-14
- UL486 A/B Listed For Wire Connectors
- Cold Temperature Rated Up To -45˚C
- Pre-Filled With Oxide Inhibitor Prevents Oxidation Moisture And Contaminats From Entering Area
- Supplies With Removable Access Plugs
- Black Insulation Is UV Resistant
- Insulation UV Stablized & Listed To UL94 With V0 Flammability
- Suitable For USe In Panel Boards, Cable Entry, Duct And Troughs
- Standard Finish Black/Clear
- Available In Colors : Black, Clear, Blue, Gray

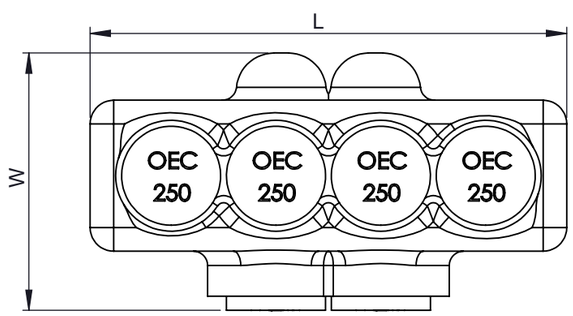

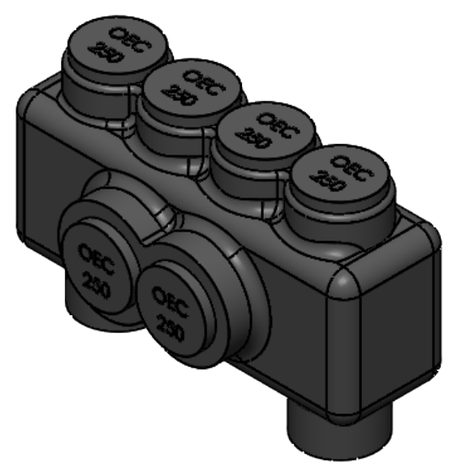

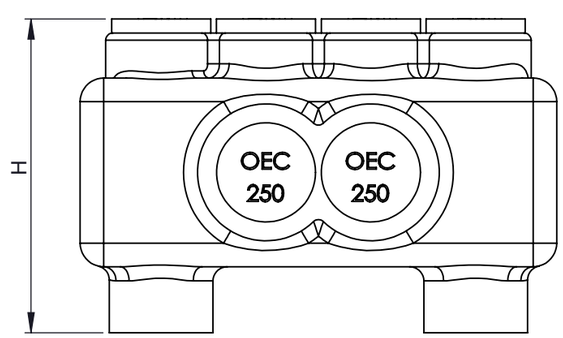

	Tolerance		
	L	W	H
	±0.50	±0.50	±1.0

TOLERANCES-UNLESS OTHERWISE SPECIFIED
2 PL. DEC. ±.015 TRUE C.L. ±.015
3 PL. DEC. ±.015 ANGLES ±.015

	NAME	DATE
DRAWN	R.P	15.03.25
CHECK	S.P.	15.03.25
APPROVED	M.K.	15.03.25

OEC Usa Inc.
106 Northfield Avenue, Edison, NJ 08837,
Phone: +1 732-479-0469 www.oec-americas.com

DWG. NO. OIM-0003
PROJECTION: FIRST ANGLE
SIZE A3
TITLE: Insulated Multi-Tap Connectors Single Sided Entry With Mounting
MATERIAL Refer Note
FINISH Refer Note
Cat Id. 60003AM - 62024A
REV
DO NOT SCALE DRAWING
SHEET 2 OF 10

THE INFORMATION CONTAINED WITHIN THIS DOCUMENT IS PROPRIETARY TO OEC AND MAY NOT BE DISCLOSED WITHOUT PRIOR WRITTEN CONSENT