Sr.No	Catalog ID	Conductor Range	Stud Size	Strip Length	Allen Hex Wrench Style	Screw Material	Torque In (lbs)	MARKING
1	50041A	4-14 Str (CU) 8-4 Str (AL)	#10	0.75	Slotted	Steel Blue Zinc Plated	45	OEC, 50041A, 4-14, AL9CU, cULus, CSA
2	50041AS					Stainless Steel-SS304	45	OEC, 50041AS, 4-14, AL9CU, cULus, CSA
3	50041AS26		1/4				45	OEC, 50041AS26, 4-14, AL9CU, cULus, CSA

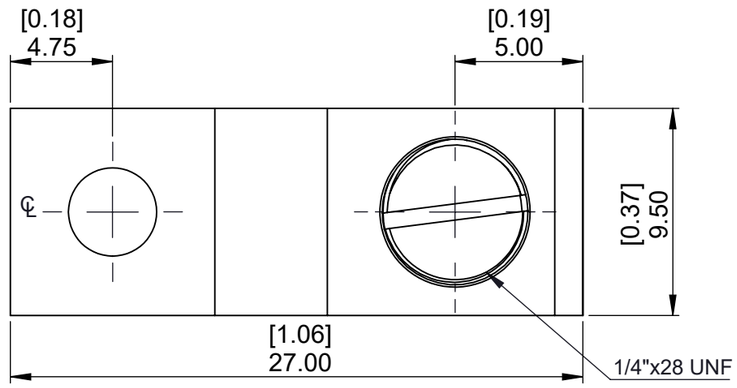

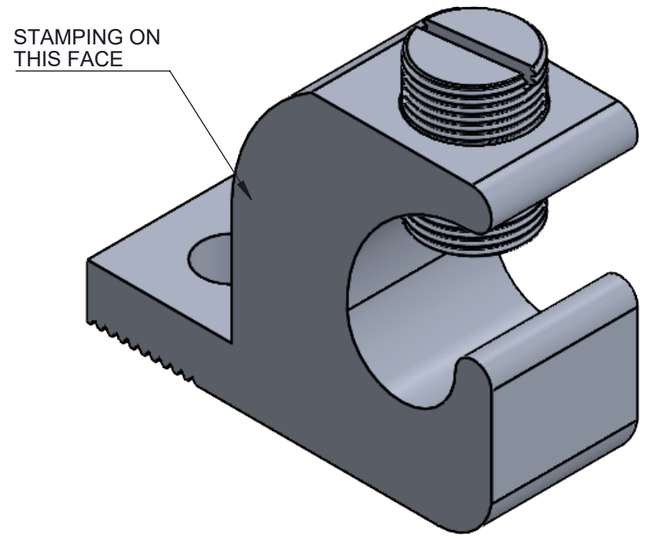

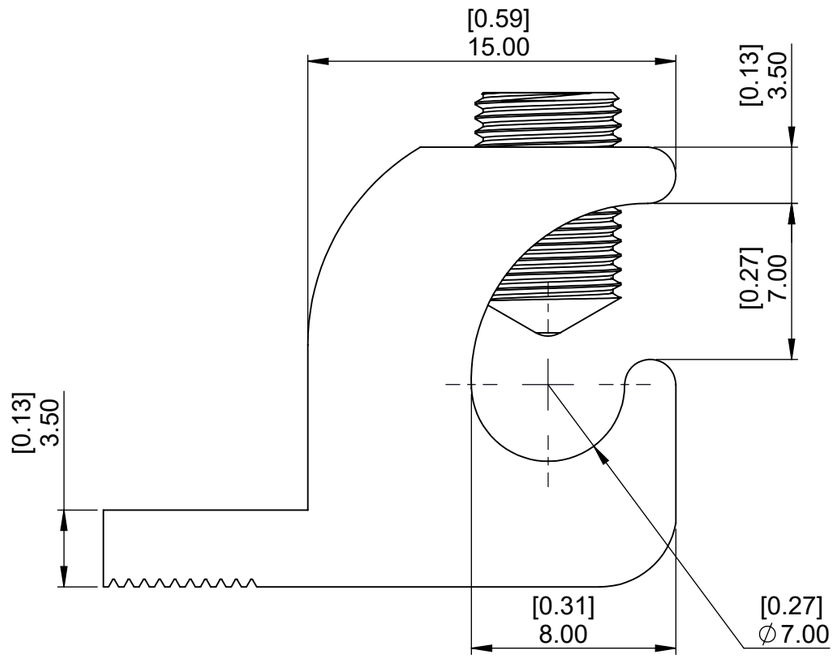

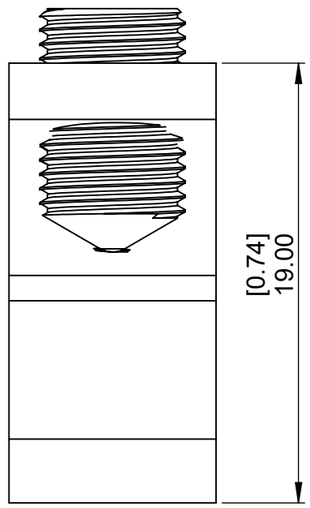

NOTE :

- Lay In Feature
- Manufactured From High Strength Aluminum.
- Tin Plating For Corrosion Resistance
- Voltage Rating : 600V
- Maximum Circuit Rating : 35kv
- Temperature Rating : 90°C

TOLERANCES-UNLESS OTHERWISE SPECIFIED
2 PL. DEC. ±.015 TRUE C.L. ±.015
3 PL. DEC. ±.015 ANGLES ±.015

	NAME	DATE
DRAWN	R.P	11.03.25
CHECK	S.P.	11.03.25
APPROVED	M.K.	11.03.25

OEC Usa Inc.
106 Northfield Avenue, Edison, NJ 08837,
Phone: +1 732-479-0469 www.oec-americas.com

DWG. NO. OL-0001
PROJECTION: FIRST ANGLE
SIZE A3
TITLE: Aluminum, Lay In Lug
MATERIAL Refer Note
FINISH Refer Note
Cat Id. 50041A - 50041AS26
REV
DO NOT SCALE DRAWING
SHEET 1 OF 4

THE INFORMATION CONTAINED WITHIN THIS DOCUMENT IS PROPRIETARY TO OEC AND MAY NOT BE DISCLOSED WITHOUT PRIOR WRITTEN CONSENT